WORKOUT FOUR

PRESENTED BY TYR

FOR TIME

50 Cal Row

35 Toes To Bar

50 Wall Balls

20 Shuttle Runs (25′ + 25' = 1)

50 Wall Balls

35 Toes To Bar

50 Cal Row

TIME CAP: 20 MINUTES

ALL DIVISIONS	MODIFIED
For Time	**For Time**
50 Cal Row	40 Cal Row
35 Toes To Bar	35 Hanging Knee Raises
50 Wall Balls	40 Wall Balls
20 Shuttle Runs (25′ + 25' = 1)	20 Shuttle Runs (25′ + 25' = 1)
50 Wall Balls	40 Wall Balls
35 Toes To Bar	35 Hanging Knee Raises
50 Cal Row	40 Cal Row
WB: 20, 14 lb (9, 6 kg) to 10', 9' (305, 274 cm)	WB: 14, 10 lb (6, 4 kg) to 10', 9' (305, 274 cm)

WORKOUT FOUR

PRESENTED BY TYR

ROAD TO 15
GYMREAPERS WODAPALOOZA
ONLINE CHALLENGE & QUALIFIER

WORKOUT FLOW

- Start seated on the rower with your hands off the handle
- At “go,” grab the handle and complete the following in order:
    - 50 Calorie row
    - 35 Toes-to-bar
    - 50 Wall balls
    - 20 Shuttle runs
    - 50 Wall balls
    - 35 Toes-to-bar
    - 50 Calorie row
- Time stops when the rower displays 50 calories on the final row (40 calories for modified)

NOTES

- Each shuttle run is 25 ft out (7.62 m) and 25 ft back (7.62 m), counting as 1 rep.
- Athletes may receive assistance resetting and turning on their rower.
- Gymnastics grips are permitted for toes-to-bar/hanging knee raises, but must be off or turned around when on the rower.

SCORE

INDIVIDUALS

- If completed within the 20-minute time cap, your score is your finish time.
- If time capped, your score is the total reps completed.

TEAMS / PAIRS

- If completed within the 20-minute time cap, the athlete's score is their finish time.
- If an athlete reaches the 20-minute time cap, their score is 20:00 plus a 1-second penalty for each uncompleted repetition.
- Total Team / Pair score will be a combination of each athlete's final score.
- **Example:** Athlete A finishes in 18:30 & Athlete B is time-capped with 15 reps remaining:
    - Athlete A: 18:30
    - Athlete B: 20:15
    - Pair’s Total Score (calculated by Competition Corner): 38:45

TIEBREAK

- Record your tiebreak time upon completing the first row
- If athletes have the same score, the faster tiebreak time wins

EQUIPMENT

- Rower (Concept2 or Rogue Echo)
- Pull-Up Bar
- Medicine Ball
- Wall-ball target of appropriate height
- Tape must be used to indicate the 25-foot (7.62 m) shuttle run course.

MOVEMENT STANDARDS

CALORIE ROW

Start of Rep

- Athletes seated on the rower
- Hands off the handle
- Monitor set to zero

During the Rep

- Athletes must remain seated until the required calories are reached

Completion of Rep

- Monitor displays the prescribed calories
- The athlete remains seated on the rower

Notes

- Monitors must be reset before the second row. Assistance with resetting is allowed.

TOES TO BAR

Start of Rep

- Athletes hang with arms fully extended
- Heels behind the pull-up bar

During the Rep

- Overhand, underhand, or mixed grips are permitted
- Any part of the feet may contact the bar
- Heels must return behind the bar before initiating the next rep

Completion of Rep

- The athlete's feet must contact the bar between the hands. The feet do not need to arrive simultaneously. One foot may arrive first and wait, but the rep is credited only when both feet are touching the bar at the same time

WALL BALLS

Start of Rep

- Ball in the front-rack position
- Hip crease below the top of the knee
- Athletes may squat clean the ball from the ground

During the Rep

- Each rep must pass through the bottom of a squat (hip crease below the top of the knee)
- If the ball contacts the ground, it must come to a complete rest before the next rep
    - Rebounding the ball into the next rep is not permitted

Completion of Rep

- The center of the ball contacts the target at or above the prescribed height.

SHUTTLE RUNS

Start of Rep

- Both feet start behind the start/finish line

During the Rep

- At each turnaround
    - Both feet must cross the line, and one hand must touch the ground past the line
- Athlete must clearly travel the full 25 ft (7.62 m) distance before returning
- Shuttle runs must be completed in full lengths (25′ + 25′ = 1 rep)

Completion of Rep

- A rep is credited when the athlete has completed
    - 25 ft out + 25 ft back (50 ft total)
- On the final rep, the athlete may run through the finish line to complete the rep

HANGING KNEE RAISES (MODIFIED)

Start of Rep

- Athletes hanging with arms fully extended
- Heels behind the pull-up bar

During the Rep

- Overhand, underhand, or mixed grips are permitted
- Heels must return behind the bar before initiating the next rep

Completion of Rep

- The athlete's knees are above the hips. The knees do not need to arrive simultaneously. One knee may arrive first and wait, but the rep is credited only when both knees are above the hips at the same time.

EXTRA

- Position and/or move the camera to verify the calories on the rower are completed.
- Face the camera during the toes to bar/hanging knee raises.
- Position and/or move the camera so all movement standards can be clearly verified throughout the workout.

FILMING STANDARDS

- Clearly state or show your name, division, and workout on camera.
    - You may also write information out and show it to the camera at the start of the video.
- Show all required competition area measurements, equipment loads, and heights clearly.
- Record the entire workout in one continuous, unedited video.
- Keep a clock or timer visible throughout the workout.
- Position the camera so all movements and required standards can be clearly verified.
- Videos filmed with a fisheye or similar lens may be rejected.
- Failure to meet these standards may result in a penalty or invalidation of the video.

Video submission is required for athletes seeking a spot through qualification, backfill spots, or Open Registration.

LAYOUT IS RECOMMENDED, NOT REQUIRED

TAP FOR VIDEO SUBMISSION GUIDELINES

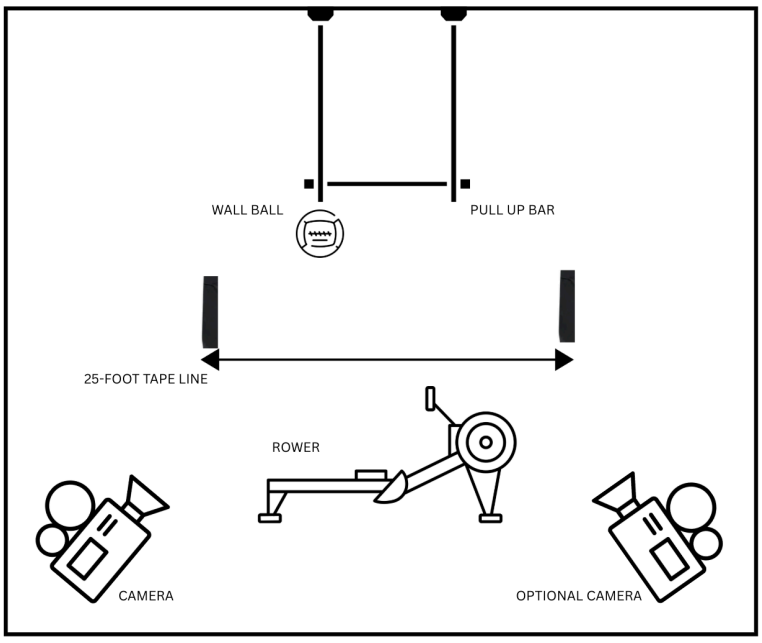

WORKOUT FOUR

PRESENTED BY TYR

ROAD TO 15
GYMREAPERS WODAPALOOZA
ONLINE CHALLENGE & QUALIFIER

ALL DIVISIONS		
50 CALORIE ROW	50	TIME
35 TOES TO BAR	85	
50 WALL BALLS	135	
20 SHUTTLE RUNS (25′+25′ = 1)	155	
50 WALL BALLS	205	
35 TOES TO BAR	240	
50 CALORIE ROW	290	
TIME OR REPS AT 20 MIN		**TIEBREAK TIME**
PAIRS/TEAMS ONLY - IF TIME CAPPED UNFINISHED REPS AT 20 MIN		**FINAL TIME** (20:00 plus :01 per unfinished reps)

WORKOUT FOUR

PRESENTED BY TYR

ROAD TO 15
GYMREAPERS WODAPALOOZA
ONLINE CHALLENGE & QUALIFIER

MODIFIED		
40 CALORIE ROW	40	TIME
35 HANGING KNEE RAISES	75	
40 WALL BALLS	115	
20 SHUTTLE RUNS (25'+25' = 1)	135	
40 WALL BALLS	175	
35 HANGING KNEE RAISES	210	
40 CALORIE ROW	250	
TIME OR REPS AT 20 MIN		**TIEBREAK TIME**
PAIRS/TEAMS ONLY - IF TIME CAPPED UNFINISHED REPS AT 20 MIN		**FINAL TIME** (20:00 plus :01 per unfinished reps)

WORKOUT FOUR

PRESENTED BY TYR

ROAD TO 15
GYMREAPERS WODAPALOOZA
ONLINE CHALLENGE & QUALIFIER

SUBMIT INDIVIDUAL SCORE	SUBMIT PAIRS/TEAMS SCORE
SCORES DUE MON, NOV 16 @ 8:00PM ET VIA COMPETITION CORNER	

SUBMISSION CHECKLIST

- [ ] Is your score entered correctly in Competition Corner?
- [ ] Did you submit your score before Monday, November 16 @ 8:00pm ET?

WHEN SUBMITTING A VIDEO

- [ ] Is this the correct video for this workout?
- [ ] Is it playable, publicly viewable, and free of copyright issues?
- [ ] Did you clearly state or show your name, division, and workout?
- [ ] Is a clock or timer clearly visible throughout the workout?
- [ ] Are all required measurements and weights clearly shown and stated?
- [ ] Can all movements be clearly verified against WZA's movement standards?
- [ ] Is the camera's view unobstructed?
- [ ] Is the video continuous and unedited?